8ft stretch

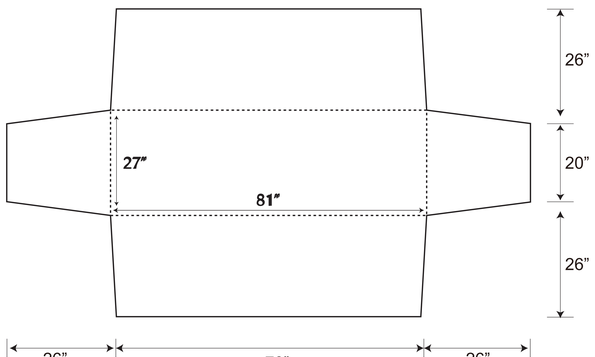

Front Back

8ft stretch - open back

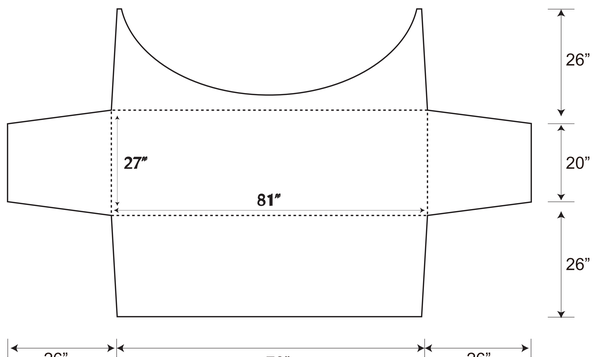

Front Back

8ft stretch - zipper back

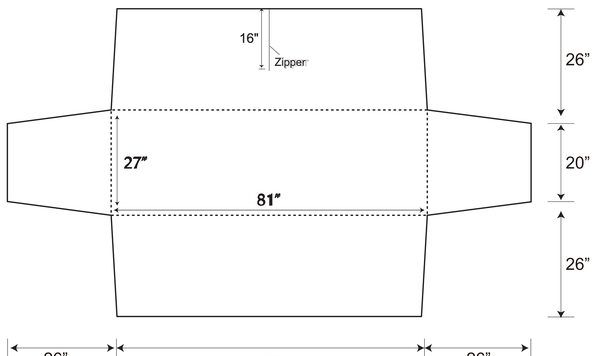

Front Back

ATTENTION:

- Files to be supplied as vector PDF , AI , EPS .
- Files can be supplied at 100%, 50% or 25% the correct proportions are important.
- Please ensure all logos and text are within the safe guide to prevent any cropping.
- All text needs to be converted to paths/outlines.
- Logos should be imported/placed as vector and must be in CMYK / pantone.
- Photographic images should be supplied at 100dpi at finished size.
- No bleed required.
- Other information required: Specific pantone colours*